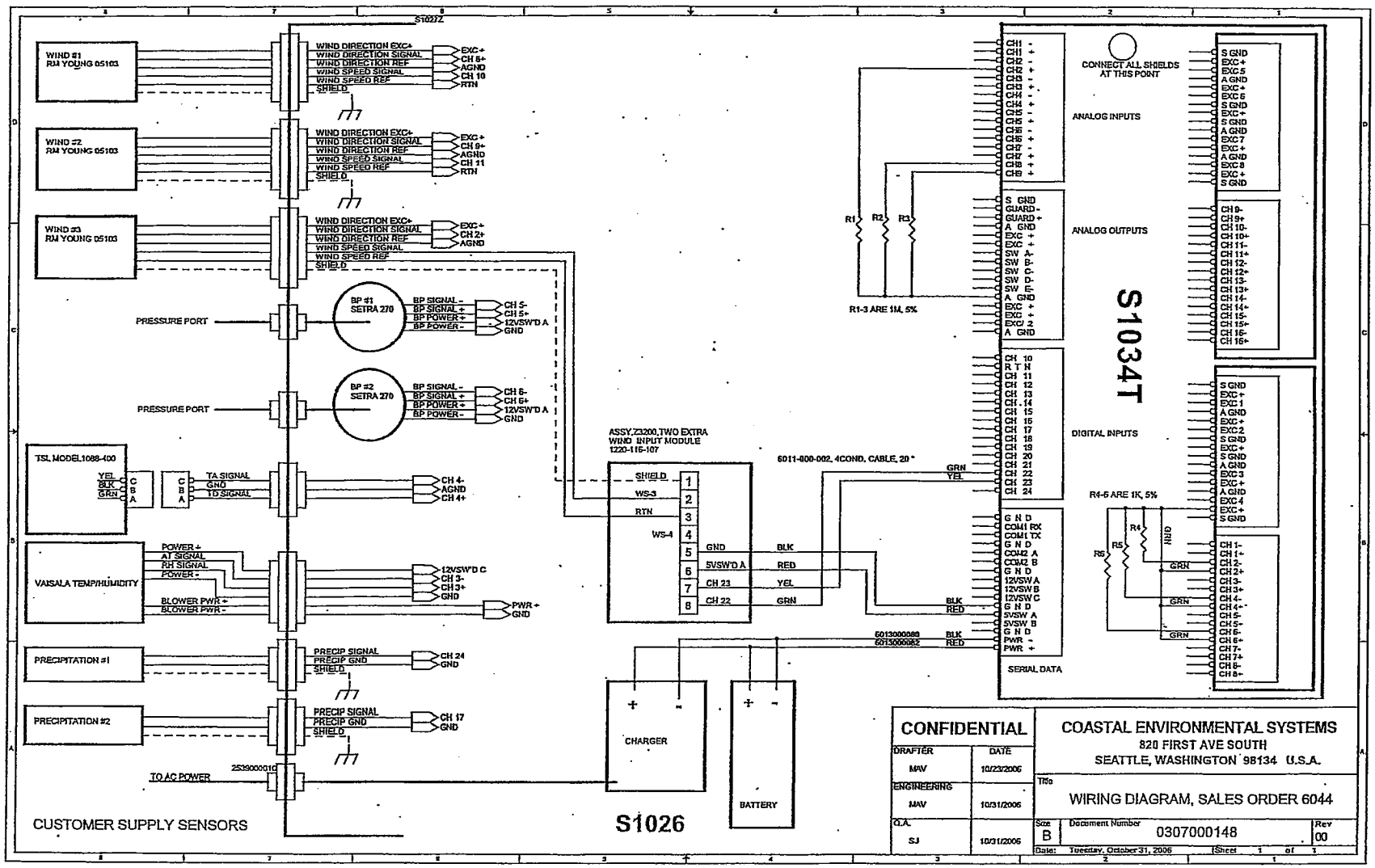
S1027Z
WIND #1 RM YOUNG 05103
WIND #2 RM YOUNG 05103
WIND #3 RM YOUNG 05103
WIND DIRECTION EXC+
WIND DIRECTION SIGNAL
WIND DIRECTION REF
WIND SPEED SIGNAL
WIND SPEED REF
SHIELD
EXC+
CH 8+
AGND
CH 10
RTN
CH 9+
CH 11
CH 2+
PRESSURE PORT
BP #1 SETRA 270
BP #2 SETRA 270
BP SIGNAL -
BP SIGNAL +
BP POWER +
BP POWER -
CH 5-
CH 5+
12VSW'D A
GND
CH 6-
CH 6+
TSL MODEL 1088-400
YEL
BLK
GRN
TA SIGNAL
GND
TD SIGNAL
CH 4-
AGND
CH 4+
VAISALA TEMP/HUMIDITY
POWER +
AI SIGNAL
RH SIGNAL
POWER -
BLOWER PWR +
BLOWER PWR -
12VSW'D C
CH 3-
CH 3+
PWR +
PRECIPITATION #1
PRECIP SIGNAL
PRECIP GND
CH 24
PRECIPITATION #2
CH 17
TO AC POWER
253900001C
CUSTOMER SUPPLY SENSORS
ASSY,23200,TWO EXTRA WIND INPUT MODULE 1220-116-107
SHIELD
WS-3
RTN
WS-4
GND
5VSW'D A
CH 23
CH 22
BLK
RED
YEL
GRN
6011-400-002, 4COND. CABLE, 20"
CHARGER
BATTERY
S1026
CONNECT ALL SHIELDS AT THIS POINT
ANALOG INPUTS
ANALOG OUTPUTS
DIGITAL INPUTS
SERIAL DATA
S1034T
R1
R2
R3
R1-3 ARE 1M, 5%
R4-5 ARE 1K, 5%
R4
R5
6013000080
6013000082
CONFIDENTIAL
DRAFTER MAV 10/23/2006
ENGINEERING MAV 10/31/2006
Q.A. SJ 10/31/2006
COASTAL ENVIRONMENTAL SYSTEMS
820 FIRST AVE SOUTH
SEATTLE, WASHINGTON 98134 U.S.A.
Title
WIRING DIAGRAM, SALES ORDER 6044
Size B
Document Number 0307000148
Rev 00
Date: Tuesday, October 31, 2006
Sheet 1 of 1

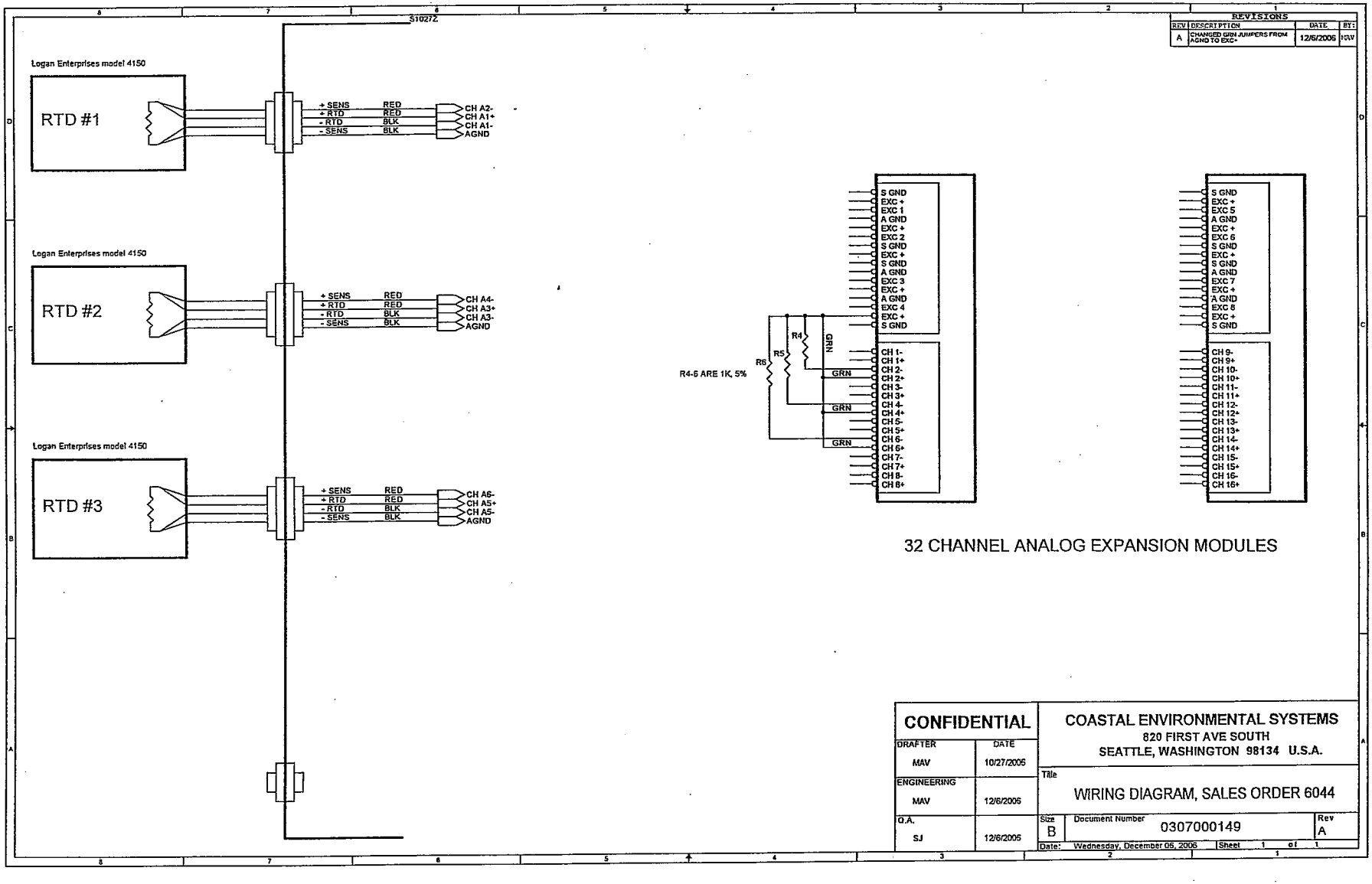

REVISIONS			
REV	DESCRIPTION	DATE	BY:
A	CHANGED GRN JUMPERS FROM AGND TO EXC+	12/6/2006	MAV

CONFIDENTIAL		COASTAL ENVIRONMENTAL SYSTEMS 820 FIRST AVE SOUTH SEATTLE, WASHINGTON 98134 U.S.A.
DRAFTER MAV	DATE 10/27/2006	Title: WIRING DIAGRAM, SALES ORDER 6044
ENGINEERING MAV	12/6/2006	
Q.A. SJ	12/6/2006	Size B · Document Number 0307000149 · Rev A
		Date: Wednesday, December 06, 2006 · Sheet 1 of 1